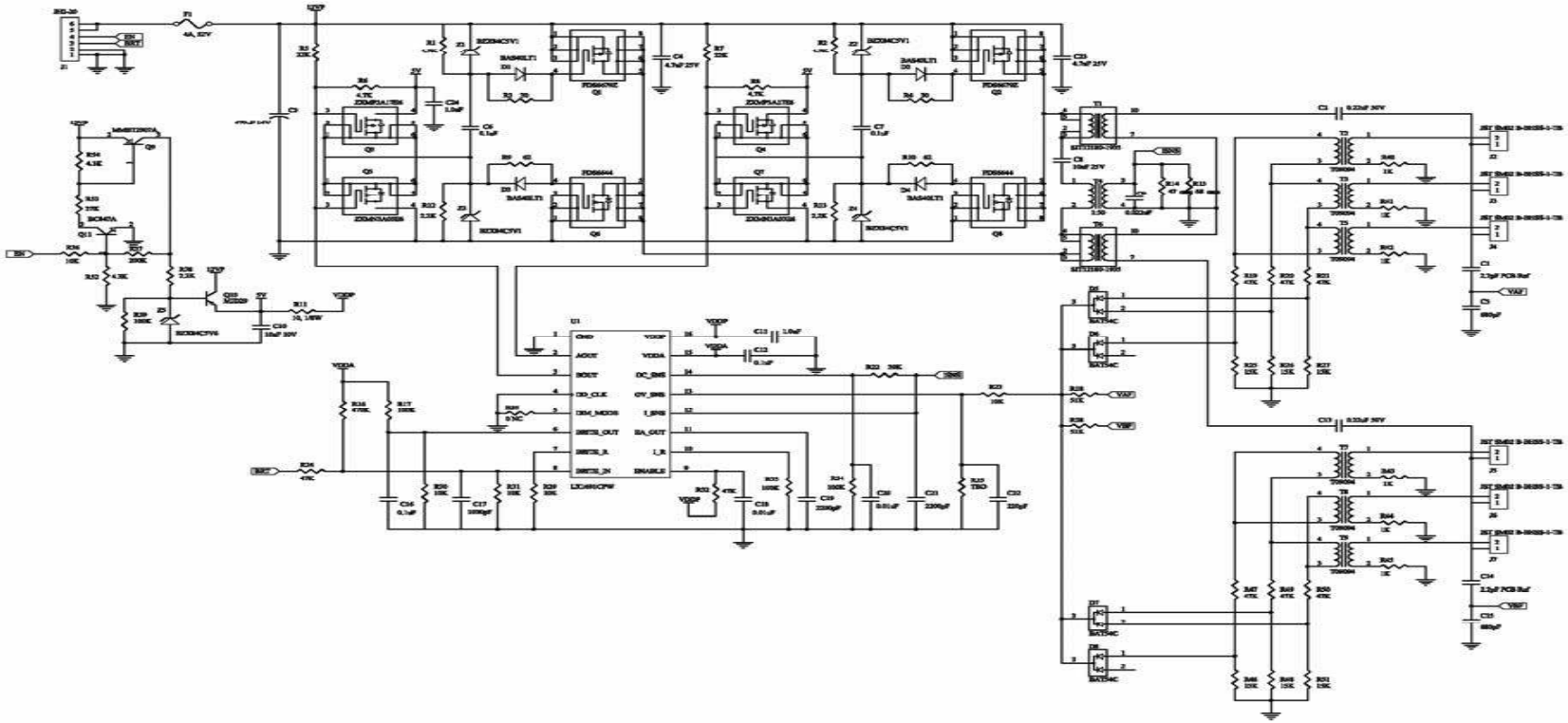INVERTER DIAGRAM